RBA-A
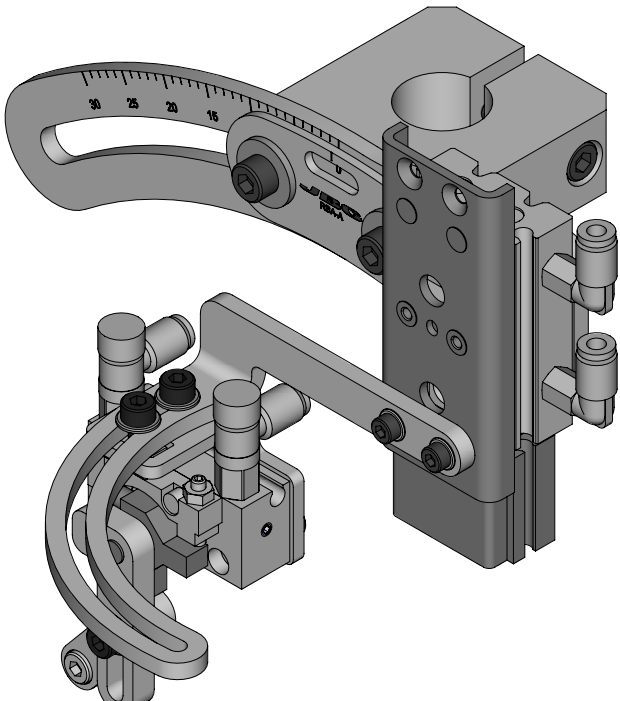
SOLDERING HEAD FOR ROBOT