CS2R470-A
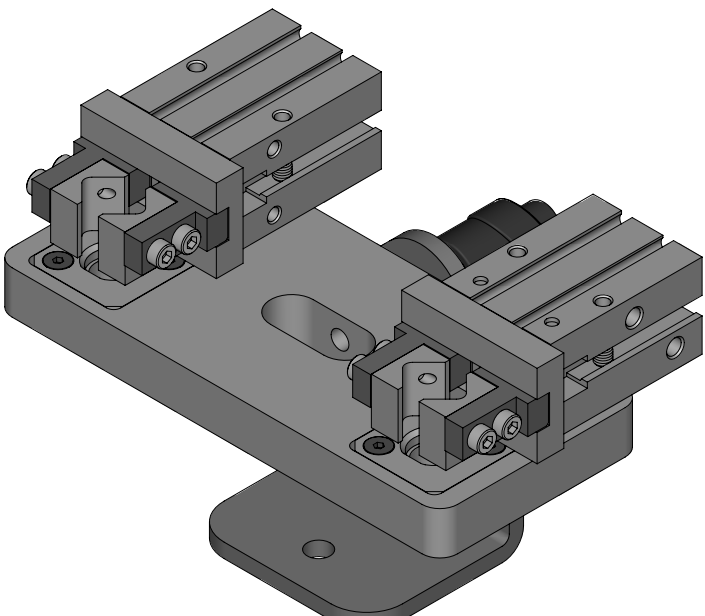
CARTRIDGE STAND FOR ROBOT